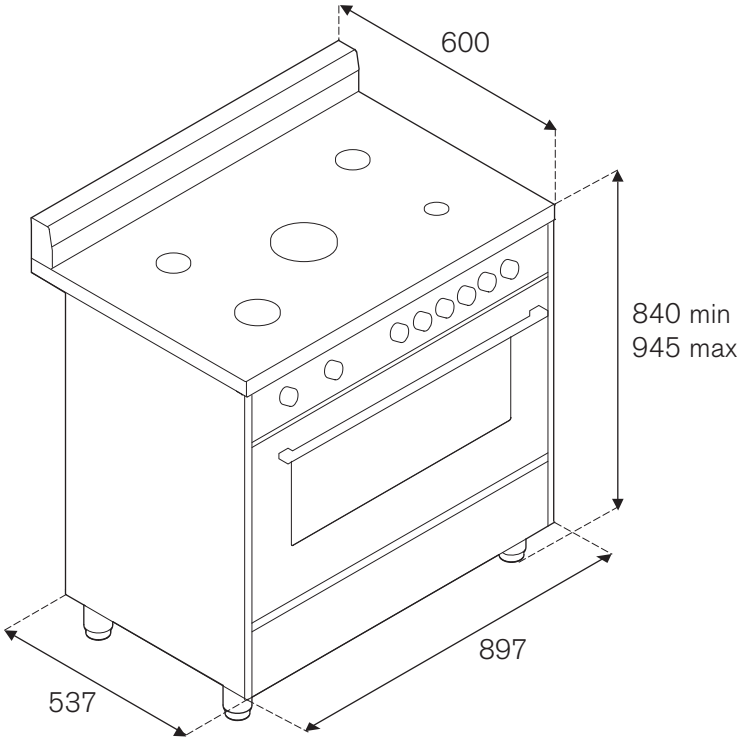

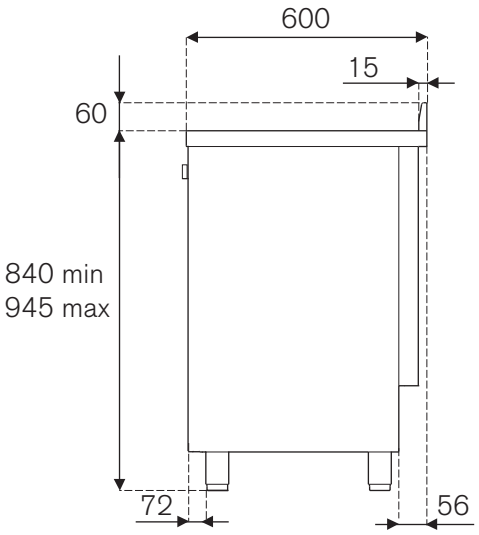

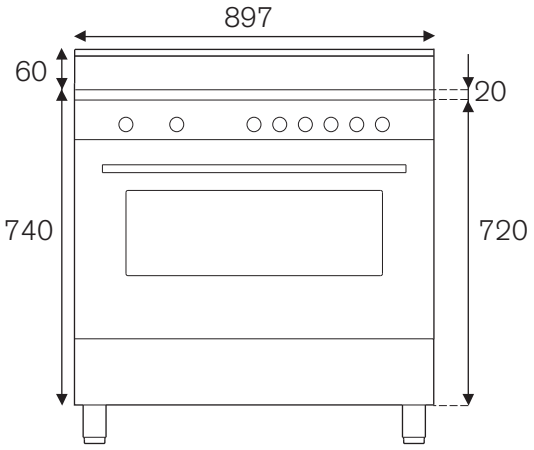

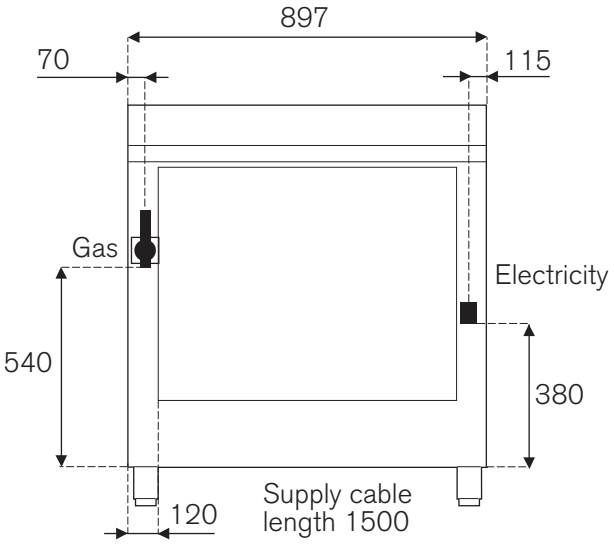

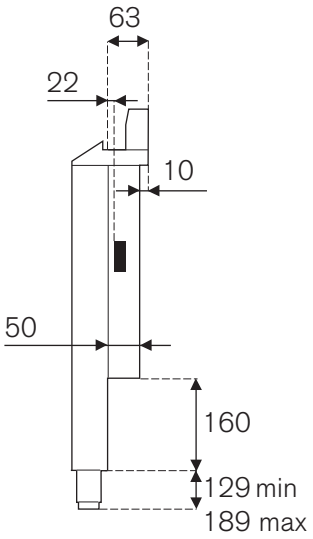

D083 C90SOST