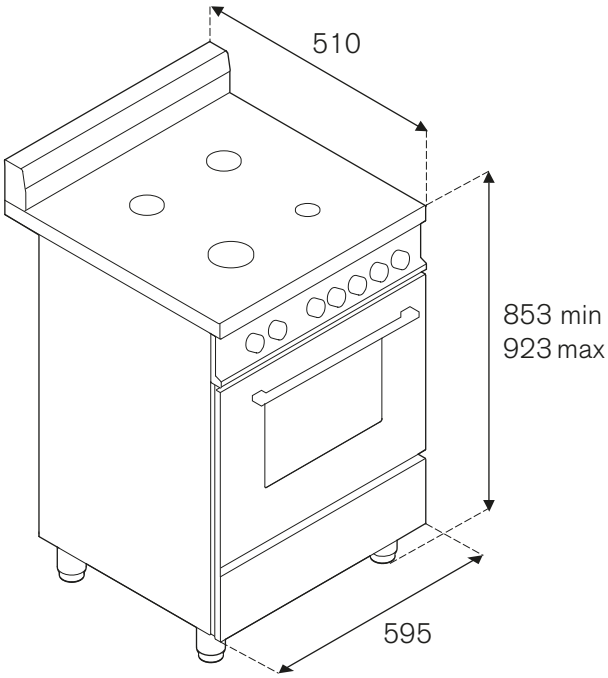

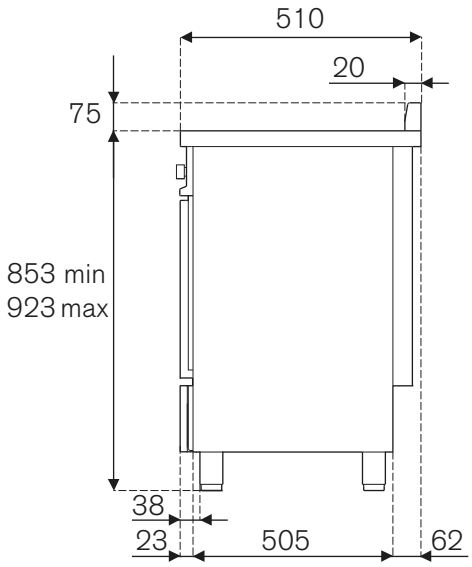

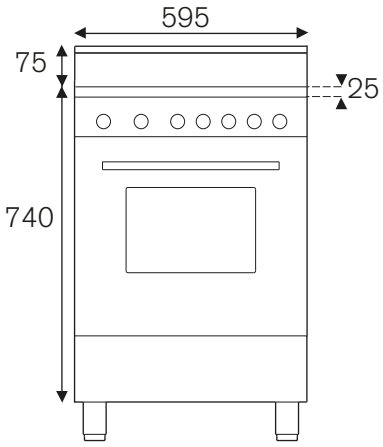

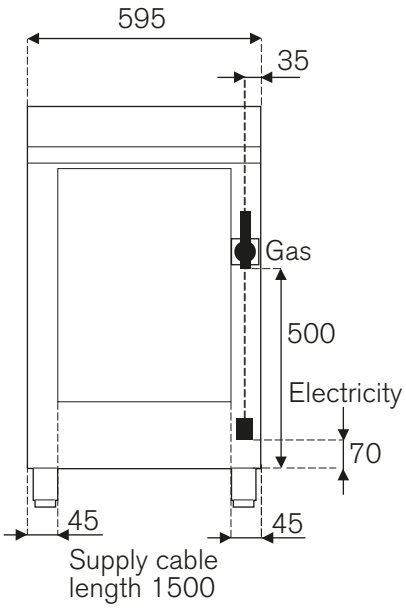

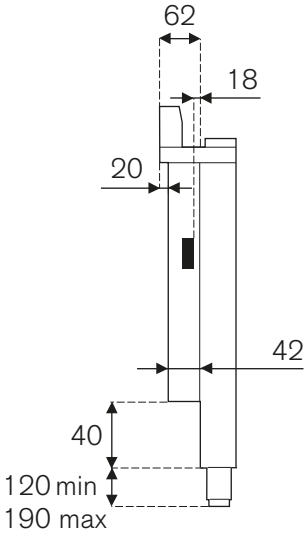

D086 C6050ST